SANDRINGHAM SL (B4447AA;B6815AA;B9208AA)

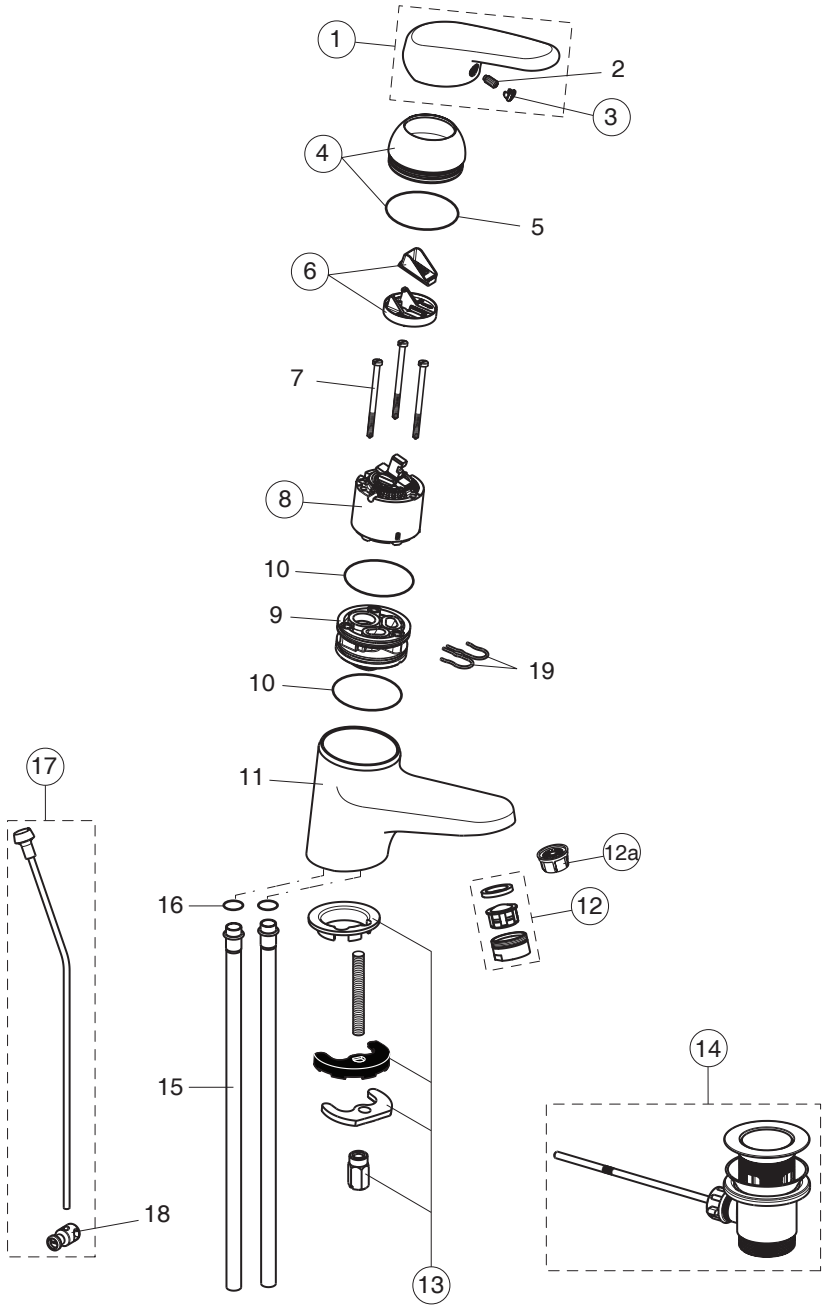

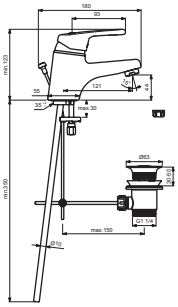

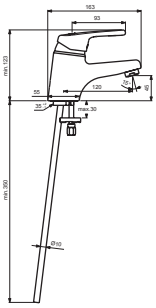

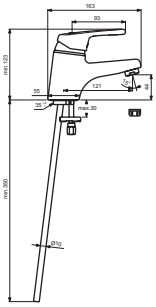

Pos.	Signify	Spare parts-Nr.	Quantity	Pos.	Signify	Spare parts-Nr.	Quantity
1	Lever,w/logo-compl.	B960345AA	1 Pcs.	12a	Reprise basin mixer nozzle	A961625AA	1 Pcs.
2	Screw M5x10		1 Pcs.	13	Connecting set	B964894NU	1 Set
3	Cap(Blue/Red)	A963054NU	1 Pcs.	14	Pop-up ass.	B960853AA	1 Pcs.
4	Rosette-compl.	B960276AA	1 Pcs.	15	Copper tube 10.5x10x395		2 Pcs.
5	O-Ring ⌀40x1		1 Pcs.	16	O-Ring ⌀10x2.5		2 Pcs.
6	Volume stop	A860700NU	1 Pcs.	17	Pull-up rod-compl.	A964527AA	1 Set
7	Screw M4x62		3 Pcs.	18	Pop up waste shackle		1 Pcs.
8	Cartridge ⌀47mm,USA	A961953NU	10 Pcs.	19	Clip		2 Pcs.
9	Manifold		1 Pcs.				
10	O-Ring ⌀44x2		2 Pcs.				
11	Body basin		1 Pcs.				
12	Aerator M24x1-set	B960754AA	1 Pcs.				
12a	Flow straightener M22/M24 housings	A962713NU	1 Pcs.				