CERASPRINT NEW Combi (B5347XX; B7574XX)

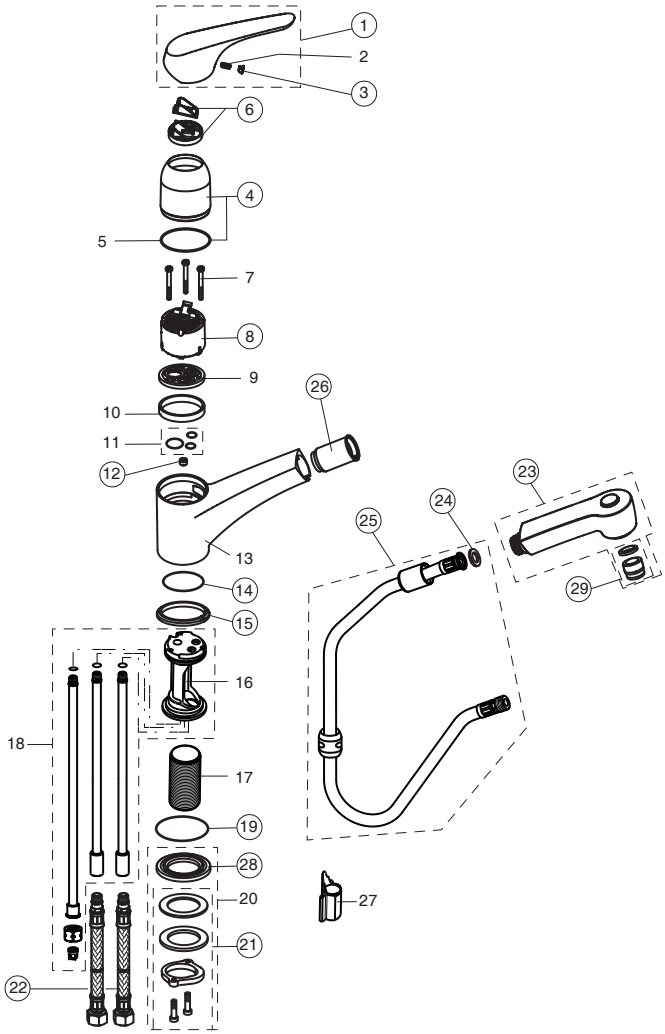

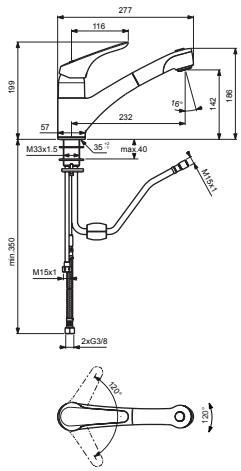

For XX = Coverage - Designate:
AA=chrome, GN=ultra/steel

For Instance:
B 960738 AA for chrome

Pos.	Signify	Spare parts-Nr	Quantity	Pos.	Signify	Spare parts-Nr	Quantity
1	Lever,w/logo ISI-compl.	B960738XX	1 Pcs.	22	Flex hose G3/8	A963305XX	1 Pcs.
2	Screw M5x10		1 Pcs.		M10x1A-375,Ø14		
3	Cap(Blue/Red)	A963054NU	1 Pcs.		Flexible hose G1/2	B964562XX	1 Pcs.
4	Cap with O-Ring	B960229XX	1 Pcs.		M10x1/8x12/L400		
5	O-Ring Ø40x1		1 Pcs.	23	Shower complete	B960215XX	1 Pcs.
6	Volume stop	A860700NU	1 Pcs.	24	Rubber washer	A961817NU	5 Pcs.
7	Screw M4x45.5		3 Pcs.				
8	Cartridge Ø47mm	A960500NU	1 Pcs.	25	Hose L1500mm-M15x1	B960460NU	1 Pcs.
9	Adapter		1 Pcs.		plastic kit with weight		
10	Adapter		1 Pcs.	26	Plastic insert	A960911NU	1 Pcs.
11	O-Ring-set		1 Pcs.	27	Schlauchfuehrung		1 Pcs.
12	Roller	A962147NU	1 Pcs.	28	Rosette decorative	B960452XX	1 Pcs.
13	Body for kitchen		1 Pcs.	29	Aerator insert	B960509NU	1 Pcs.
14	O-Ring Ø36x2	A961335NU	1 Pcs.				
15	Gleitring 39.8-47.5-4	B960254NU	1 Pcs.				
16	Manifold COMBI		1 Pcs.				
17	Shank M33x1.5		1 Pcs.				
18	Manifold assembly		1 Pcs.				
19	O-Ring Ø42.52x2.62	A960331NU	1 Pcs.				
20+27	Assembly for kitchen		1 Pcs.				
21	Connecting group	B960255NU	1 Set				