OPUS

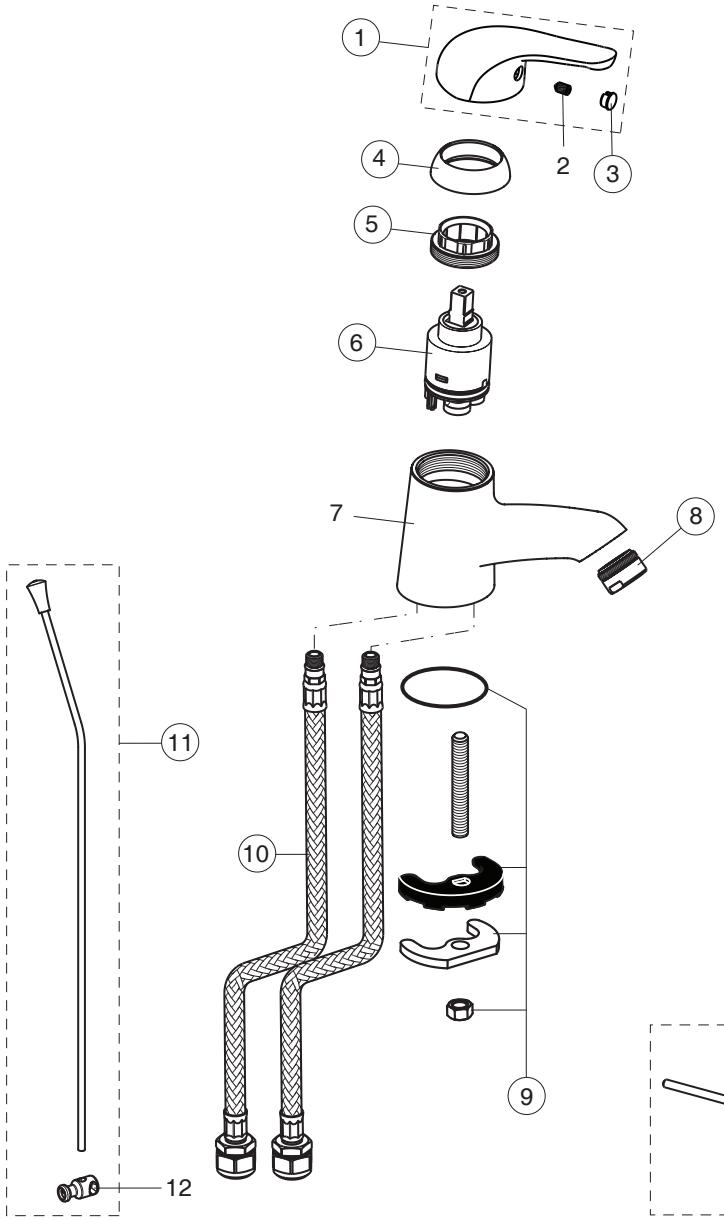

B0291AA

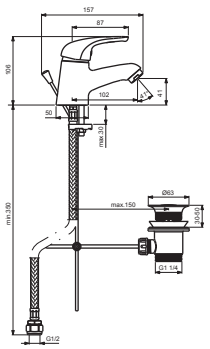

B0292AA

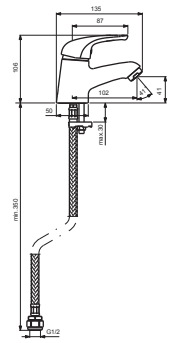

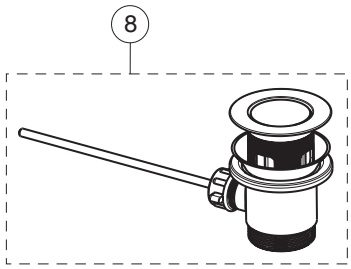

Pos.	Signify	Spare parts-Nr.	Quantity	Pos.	Signify	Spare parts-Nr.	Quantity
1	Lever,w/logo ISI-compl.	B961040AA	1 Pcs.				
2	Screw M5x8		1 Pcs.				
3	Cap(Blue/Red)	B964696NU	1 Pcs.				
4	Cap	B964697AA	1 Pcs.				
5	Screw M37x1.5	B964698NU	1 Pcs.				
6	Cartridge GEAR N35HW	B960887NU	1 Pcs.				
7	Body basin		1 Pcs.				
8	Nozzle	A961625AA	1 Pcs.				
9	Fixation kit	B964701NU	1 Set				
10	Flex pexhose G1/2 M10x1/Ø15/L380mm	B960511NU	1 Pcs.				
11	Pull-up rod-compl.	B960371AA	1 Set				
12	Pop-up ass.	B960853AA	1 Pcs.				