Paglia A6493.. A6494..

sottini

Produced from: April 2015

Single lever basin mixer
with pop-up waste
with flexible hose
chrome **A6493AA**

without pop-up waste
with flexible hose
chrome **A6494AA**

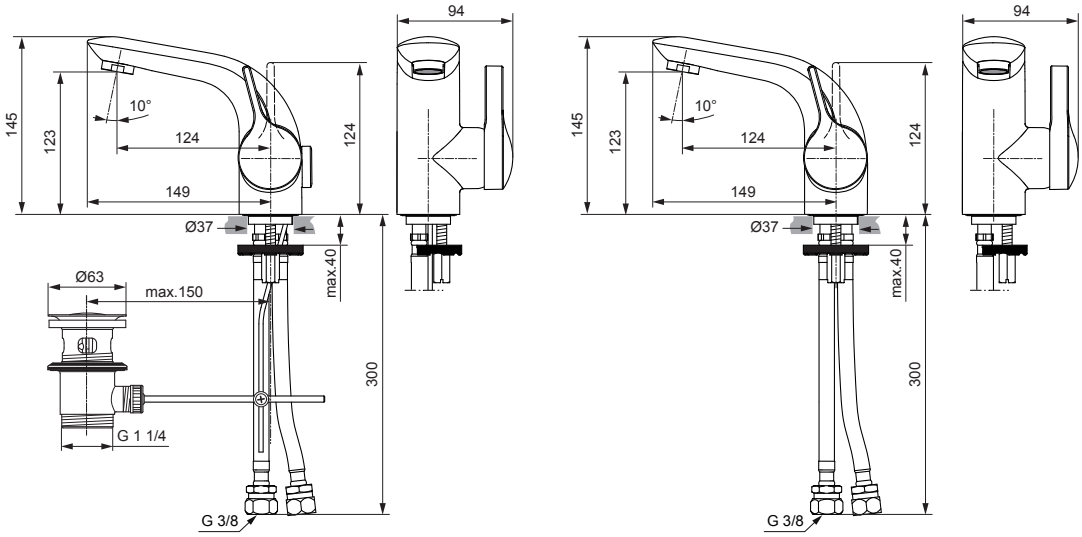

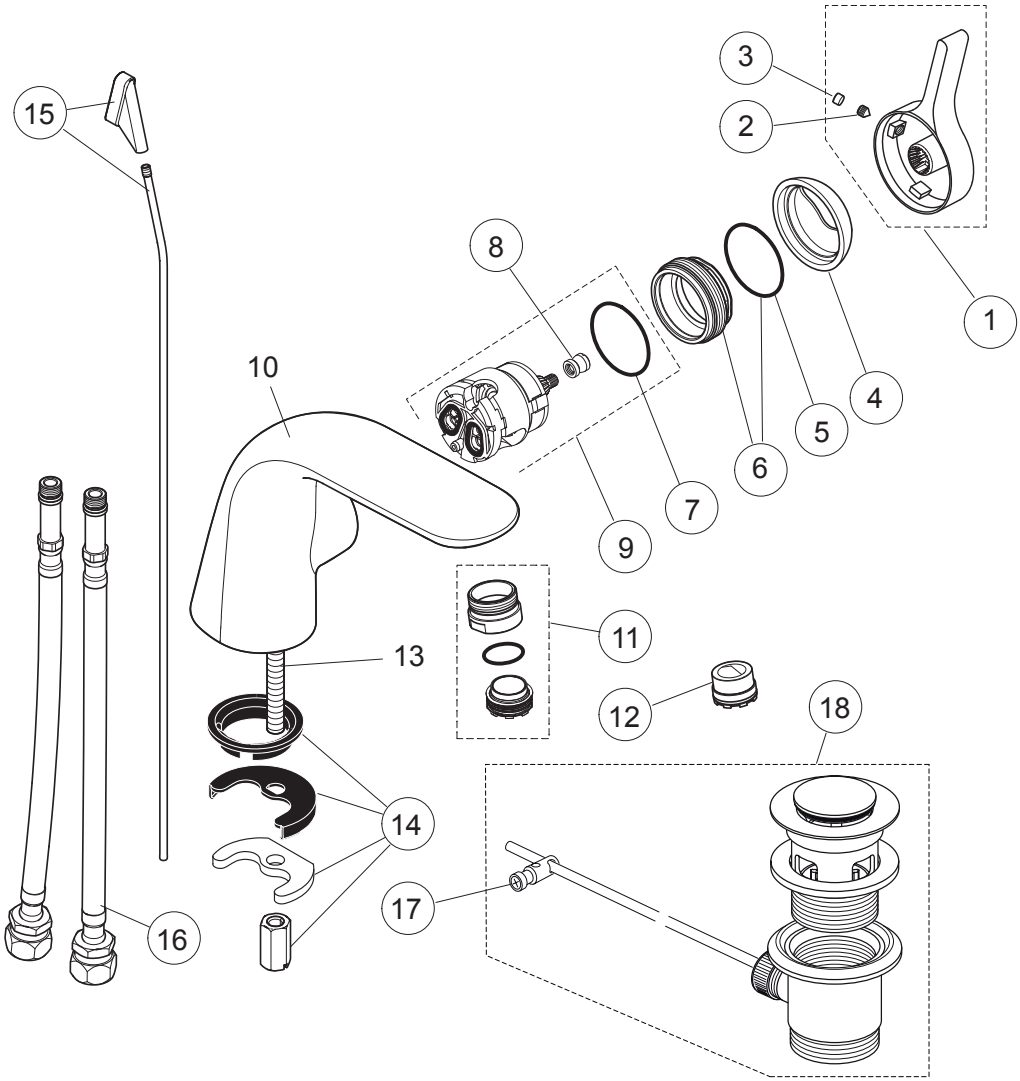

Pos.	Description	Part-Number	Qty.	Pos.	Description	Part-Number	Qty.
1	Lever cpl. with Logo Sottini	**A 860 962 AA**	1 Set	11	Aerator M24x1 cpl. 5Ltr.	**A 962 080 AA**	1 Set
2	Thread pin M5x6 DIN914	**A 963 667 NU**	1 pcs	12	Aerator M21,5x1 full flow	**A 962 079 NU**	1 pcs
3	Rubber button	**A 963 751 NU**	1 pcs		Aerator key for Pos. 11+12	**A 960 196 NU**	1 pcs
4	Cartr. Cover (Cap)	**A 961 485 AA**	1 pcs	13	Stud M8 x 63		
5	O - Ring Ø 28,3 x 1,78	**A 961 667 NU**	2 pcs	14	Fixation-set	**A 960 001 NU**	1 Set
6	Clamping nut M43 x 1,5	**N 960 019 AA**	1 Set	15	Pull knob with rod	**A 962 081 AA**	1 Set
7	O - Ring Ø 35 x 3,2	**A 962 715 NU**	1 pcs	16	Flex. hose M12x1 / G1/2	**A 962 082 NU**	1 pcs
8	Nut f. handle adaption	**A 963 372 NU**	1 pcs	17	Bracket	**A 963 404 NU**	1 pcs
9	Cartridge Multiport cpl.	**A 962 985 NU**	1 set	18	Pop-up waste complete	**A 961 230 AA**	1 Set
10	Body						