E6469 E6857 Concept Connect 500mm Wall Unit

E6469 SO - America Oak E6857 SO - America Oak
E6469 SX - Dark Walnut E6857 SX- Dark Walnut
E6469 WG - White Gloss E6857 WG - White Gloss

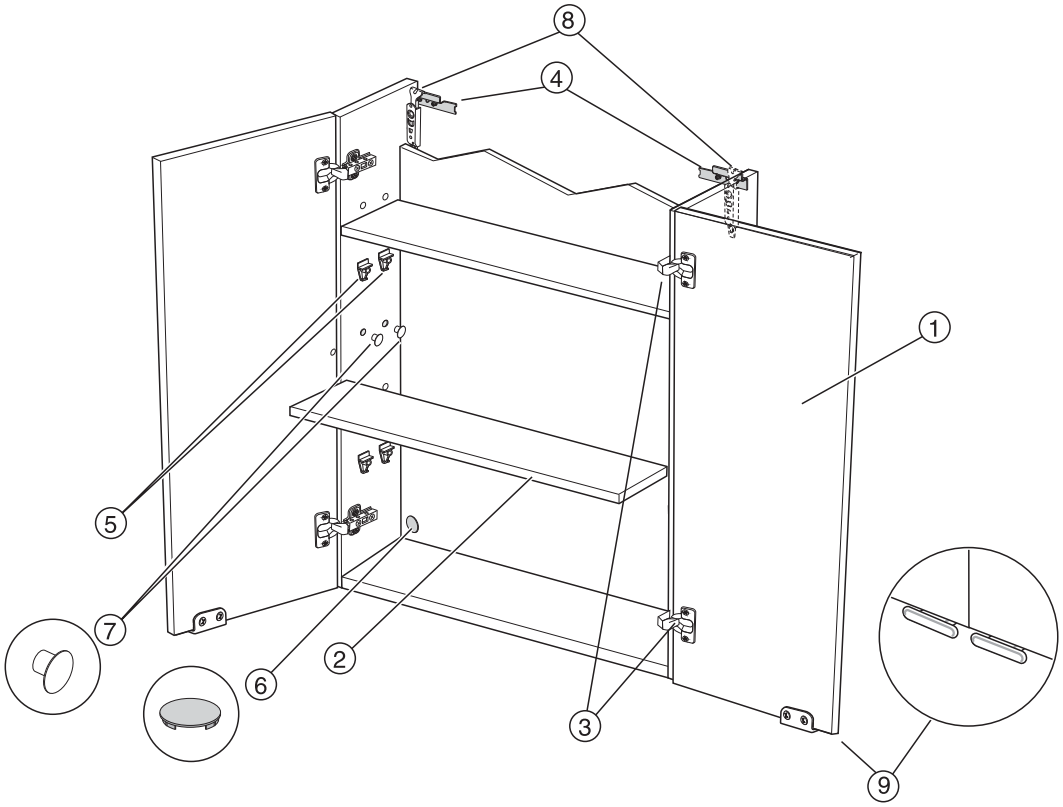

Item	Description	Colour/Finish	Code No.	Quantity
1 1 1	250mm Door 250mm Door 250mm Door	America Oak Dark Walnut White Gloss	EV676 SO EV676 SX EV676 WG	1 1 1
2 2 2	500mm Shelf 500mm Shelf 500mm Shelf	America Oak Dark Walnut White Gloss	EV677 SO EV677 SX EV677 WG	1 1 1
3	Soft Close Hinge		EV60067	Pair
4	Suspension Plates		EV61067	Pair
5	Metal Shelf Supports		EV61167	4
6	Metalic Cover Caps		EV61267	4
7 7 7	Hole Cover Caps Hole Cover Caps Hole Cover Caps	Oak Walnut White	EV61367 EV61467 EV61667	20 20 20
8	Concealed Cabinet Hanger		EV60167	Pair
9	Wall Unit Handles	Chrome	E6749AA	1

CONCEPT CONNECT

Ideal Standard (UK) Ltd. The Bathroom Works, National Avenue, Kingston Upon Hul, HU5 4HS. T 01482 346461 F 01482 445886 www.ideal-standard.co.uk