E6465 E6853 Concept Connect 300mm Tall Unit - 2 Doors

E6465 SO - America Oak E6853 SO - America Oak
E6465 SX - Dark Walnut E6853 SX- Dark Walnut
E6465 WG - White Gloss E6853 WG - White Gloss

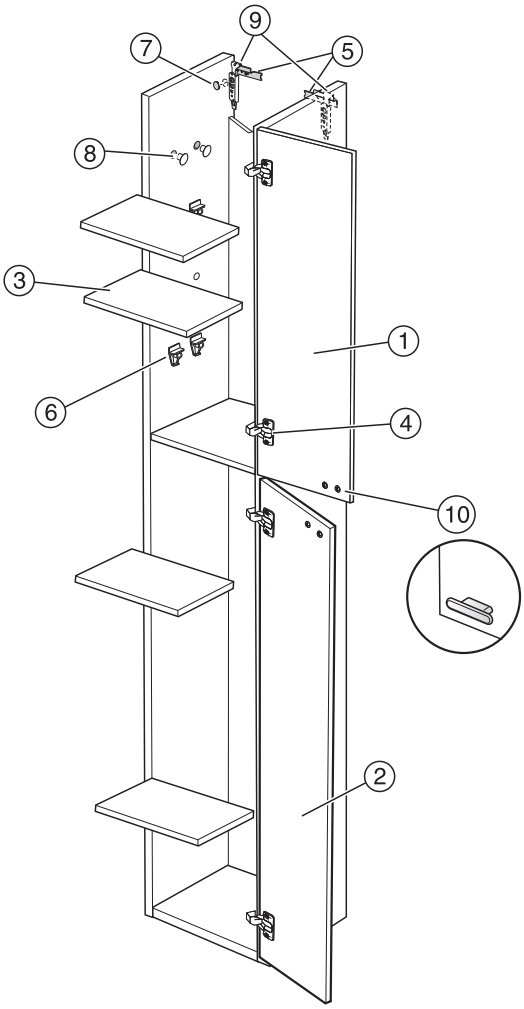

Item	Description	Colour/Finish	Code No.	Quantity
1	300mm Door	America Oak	EV685 SO	1
1	300mm Door	Dark Walnut	EV685 SX	1
1	300mm Door	White Gloss	EV685 WG	1
2	Bottom Door	America Oak	EV673 SO	1
2	Bottom Door	America Oak	EV673 SX	1
2	Bottom Door	America Oak	EV673 WG	1
3	Shelf	America Oak	EV672 SO	1
3	Shelf	Dark Walnut	EV672 SX	1
3	Shelf	White Gloss	EV672 WG	1
4	Soft Close Hinge		EV60067	Pair
5	Suspension Plates		EV61067	Pair
6	Metal Shelf Supports		EV61167	4
7	Metalic Cover Caps		EV61267	4
8	Hole Cover Caps	Oak	EV61367	20
8	Hole Cover Caps	Walnut	EV61467	20
8	Hole Cover Caps	White	EV61667	20
9	Concealed Cabinet Hanger		EV60167	Pair
10	Base Unit Handle	Chrome	E6748AA	1