E6464 E6849 Concept Connect 300mm Tall Unit - 1 Door 2 Drawers

E6464 SO - America Oak E6849 SO - America Oak
E6464 SX - Dark Walnut E6849 SX - Dark Walnut
E6464 WG - White Gloss E6849 WG - White Gloss

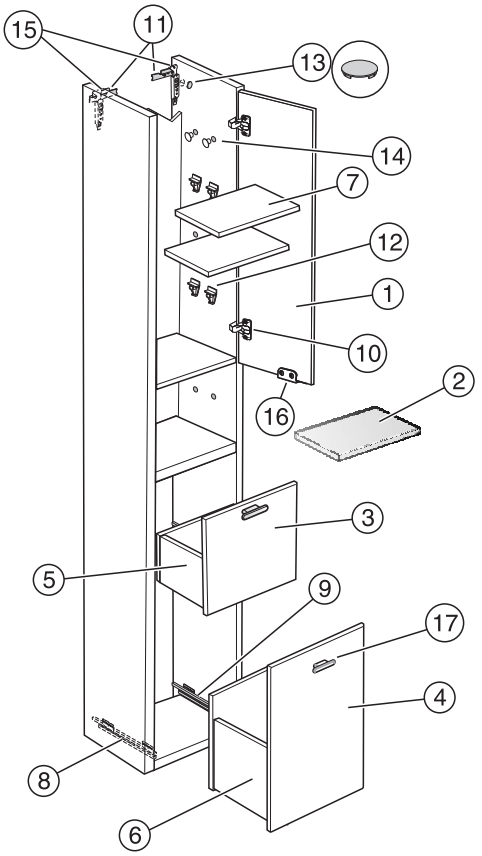

Item	Description	Colour/Finish	Code No.	Quantity
1	300mm Door	America Oak	EV685 SO	1
1	300mm Door	Dark Walnut	EV685 SX	1
1	300mm Door	White Gloss	EV685 WG	1
2	300mm Glass Shelf		EV671 RQ	1
3	Middle Drawer Front	America Oak	EV657 SO	1
3	Middle Drawer Front	Dark Walnut	EV657 SX	1
3	Middle Drawer Front	White Gloss	EV657 WG	1
4	Bottom Drawer Front	America Oak	EV658 SO	1
4	Bottom Drawer Front	Dark Walnut	EV658 SX	1
4	Bottom Drawer Front	White Gloss	EV658 WG	1
5	Middle Drawer Box		EV66067	1
6	Bottom Drawer Box		EV66167	1
7	Shelf	America Oak	EV672 SO	1
7	Shelf	Dark Walnut	EV672 SX	1
7	Shelf	White Gloss	EV672 WG	1
8	300 Deep Left Drawer Runner & Bracket		EV60867	1
9	300 Deep Right Drawer Runner & Bracket		EV60967	1
10	Soft Close Hinge		EV60067	Pair
11	Suspension Plates		EV61067	Pair
12	Metal Shelf Supports		EV61167	4
13	Metalic Cover Caps		EV61267	4
14	Hole Cover Caps	Oak	EV61367	20
14	Hole Cover Caps	Walnut	EV61467	20
14	Hole Cover Caps	White	EV61667	20
15	Concealed Cabinet Hanger		EV60167	Pair
16	Wall Unit Handle	Chrome	E6749AA	1
17	Base Unit Handle	Chrome	E6748AA	1