E6462 E6847 Concept Connect 300 x 210mm Storage Unit - Wall Hung

E6462 SO - America Oak E6847 SO - America Oak
E6462 SX - Dark Walnut E6847 SX - Dark Walnut
E6462 WG - White Gloss E6847 WG - White Gloss

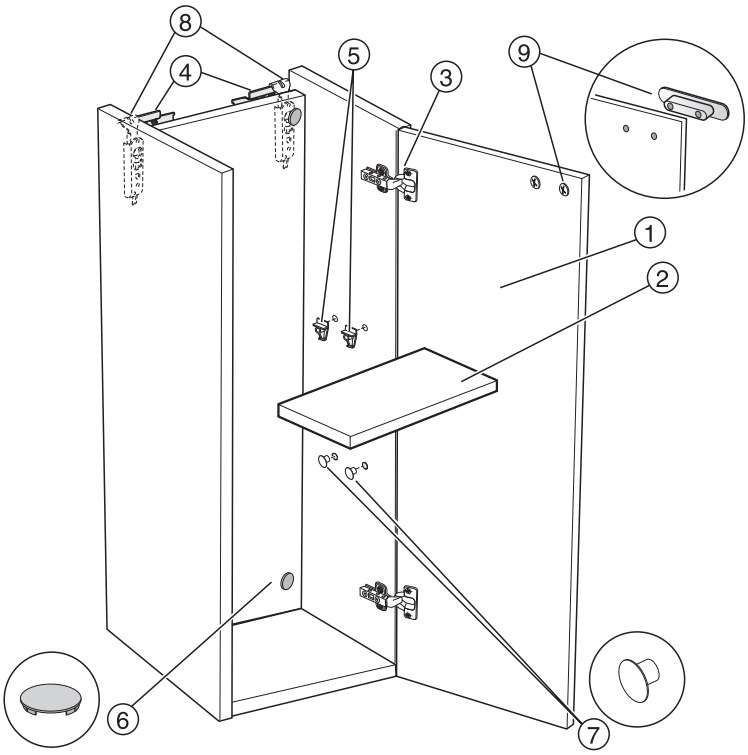

CONCEPT CONNECT

Item	Description	Colour/Finish	Code No.	Quantity
1 1 1	Door Door Door	America Oak Dark Walnut White Gloss	EV654 SO EV654 SX EV654 WG	1 1 1
2 2 2	Shelf Shelf Shelf	America Oak Dark Walnut White Gloss	EV688 SO EV688 SX EV688 WG	1 1 1
3	Soft Close Hinge		EV60067	Pair
4	Suspension Plates		EV61067	Pair
5	Metal Shelf Supports		EV61167	4
6	Metalic Cover Caps		EV61267	4
7 7 7	Hole Cover Caps Hole Cover Caps Hole Cover Caps	Oak Walnut White	EV61367 EV61467 EV61667	20 20 20
8	Concealed Cabinet Hanger		EV60167	Pair
9	Base Unit Handle	Chrome	E6748AA	1

Ideal Standard (UK) Ltd. The Bathroom Works, National Avenue, Kingston Upon Hul, HU5 4HS. T 01482 346461 F 01482 445886 www.ideal-standard.co.uk