E6457 E6844 Concept Connect 300 x 300mm Drawer Unit - Wall Hung

E6457 SO - America Oak E6844 SO - America Oak
E6457 SX - Dark Walnut E6844 SX - Dark Walnut
E6457 WG - White Gloss E6844 WG - White Gloss

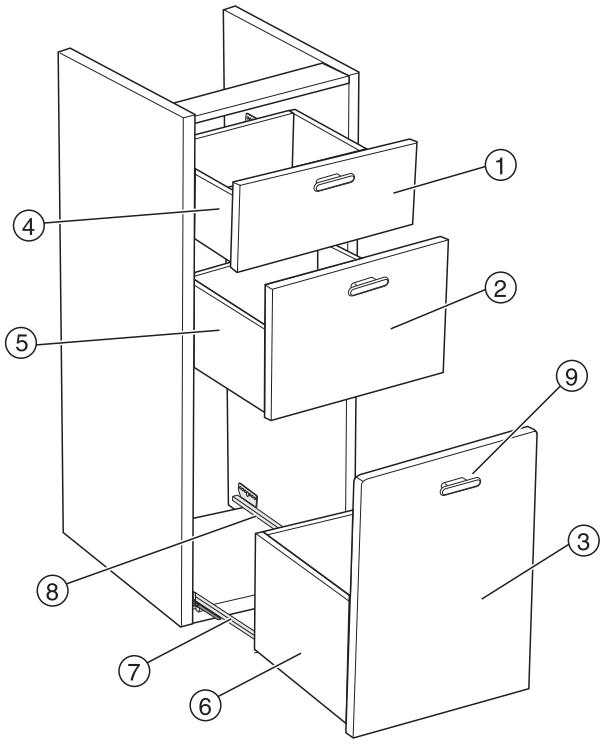

CONCEPT CONNECT

Item	Description	Colour/Finish	Code No.	Quantity
1	300 Top Drawer Front	America Oak	EV656 SO	1
1	300 Top Drawer Front	Dark Walnut	EV656 SX	1
1	300 Top Drawer Front	White Gloss	EV656 WG	1
2	300 Middle Drawer Front	America Oak	EV657 SO	1
2	300 Middle Drawer Front	Dark Walnut	EV657 SX	1
2	300 Middle Drawer Front	White Gloss	EV657 WG	1
3	300 Bottom Drawer Front	America Oak	EV658 SO	1
3	300 Bottom Drawer Front	Dark Walnut	EV658 SX	1
3	300 Bottom Drawer Front	White Gloss	EV658 WG	1
4	300 Top Drawer Box		EV65967	1
5	300 Middle Drawer Box		EV66067	1
6	300 Bottom Drawer Box		EV66167	1
7	300 Deep Left Drawer Runner & Bracket		EV60867	1
8	300 Deep Right Drawer Runner & Bracket		EV60967	1
9	Base Unit Handle	Chrome	E6748AA	1