E6452 E6838 Concept Connect 500 x 300mm Basin Unit - Wall Hung

E6452 SO - America Oak E6838 SO - America Oak
E6452 SX - Dark Walnut E6838 SX - Dark Walnut
E6452 WG - White Gloss E6838 WG - White Gloss

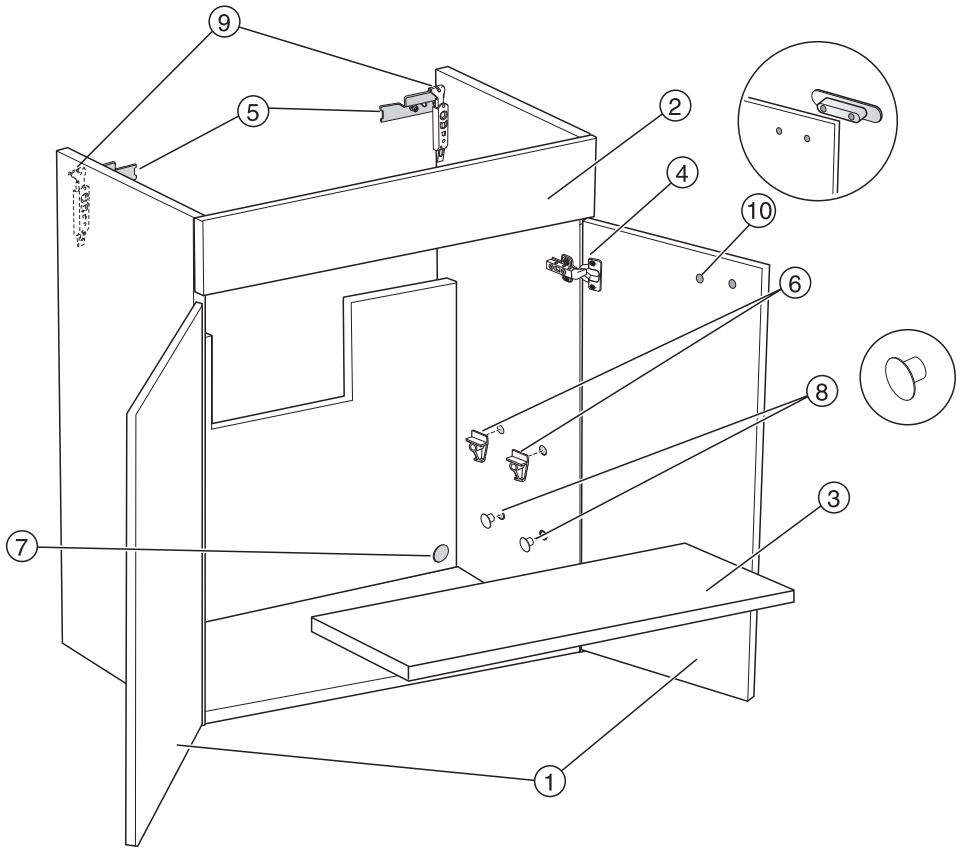

Item	Description	Colour/Finish	Code No.	Quantity
1 1 1	250 Door 250 Door 250 Door	America Oak Dark Walnut White Gloss	EV644 SO EV644 SX EV644 WG	1 1 1
2 2 2	Top Panel Top Panel Top Panel	America Oak Dark Walnut White Gloss	EV645 SO EV645 SX EV645 WG	1 1 1
3 3 3	Shelf Shelf Shelf	America Oak Dark Walnut White Gloss	EV646 SO EV646 SX EV646 WG	1 1 1
4	Soft Close Hinge		EV60067	Pair
5	Suspension Plates		EV61067	Pair
6	Metal Shelf Supports		EV61167	4
7	Metalic Cover Caps		EV61267	4
8 8 8	Hole Cover Caps Hole Cover Caps Hole Cover Caps	Oak Walnut White	EV61367 EV61467 EV61667	20 20 20
9	Concealed Cabinet Hanger		EV60167	Pair
10	Base Unit Handle	Chrome	E6748AA	1

CONCEPT CONNECT