E6446 E6830 Concept Connect 550mm Cube Basin Unit - Wall Hung

E6446 SO - America Oak E6830 SO - America Oak
E6446 SX - Dark Walnut E6830 SX - Dark Walnut
E6446 WG - White Gloss E6830 WG - White Gloss

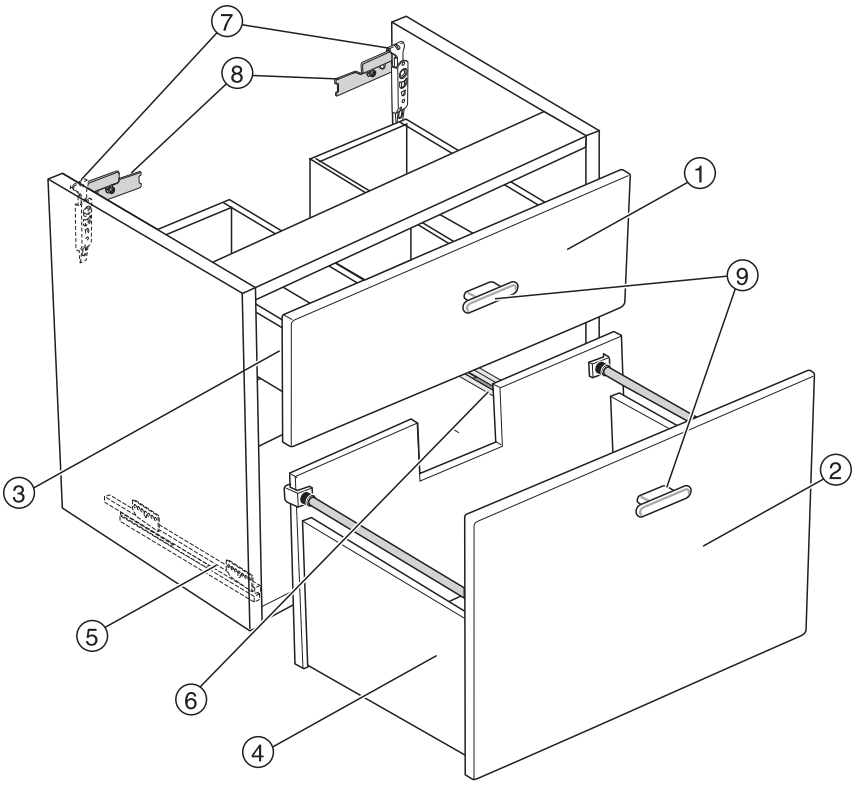

Item	Description	Colour/Finish	Code No.	Quantity
1 1 1	Top 550 Drawer Front Top 550 Drawer Front Top 550 Drawer Front	America Oak Dark Walnut White Gloss	EV630 SO EV630 SX EV630 WG	1 1 1
2 2 2	Bottom 550 Drawer Front Bottom 550 Drawer Front Bottom 550 Drawer Front	America Oak Dark Walnut White Gloss	EV631 SO EV631 SX EV631 WG	1 1 1
3	Top 550 Drawer Box		EV63267	1
4	Bottom 550 Drawer Box		EV63367	1
5	420 Deep Left Drawer Runner & Bracket		EV60267	1
6	420 Deep Right Drawer Runner & Bracket		EV60367	1
7	Concealed Cabinet Hanger		EV60167	Pair
8	Suspension Plates		EV61067	Pair
9	Base Unit Handle	Chrome	E6748AA	1

CONCEPT CONNECT