E6445 E6829 Concept Connect 500mm Cube Basin Unit - Wall Hung

E6445 SO - America Oak E6829 SO - America Oak
E6445 SX - Dark Walnut E6829 SX - Dark Walnut
E6445 WG - White Gloss E6829 WG - White Gloss

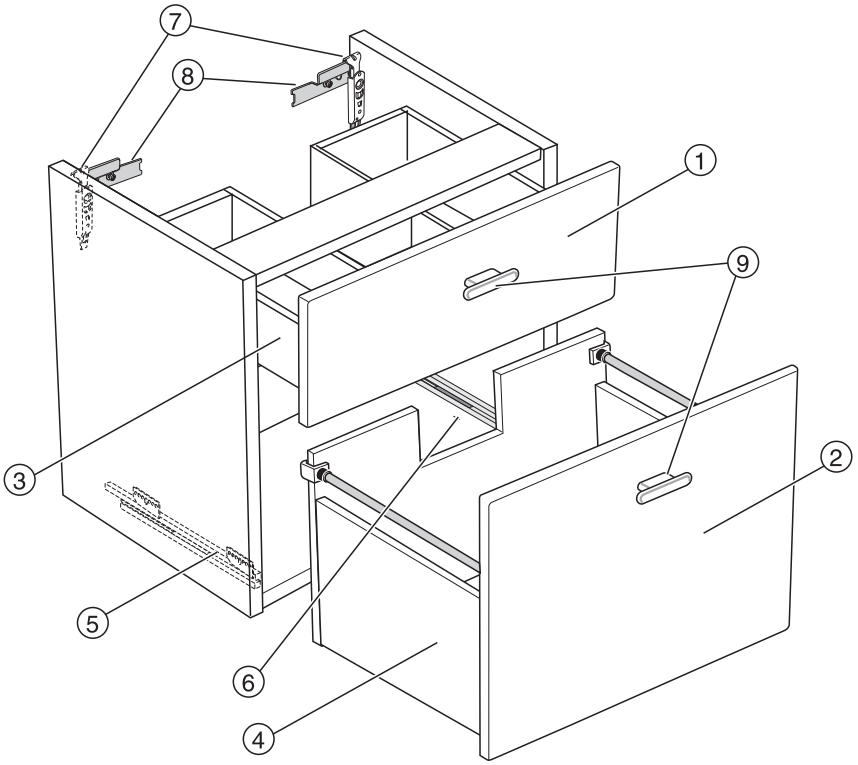

Item	Description	Colour/Finish	Code No.	Quantity
1 1 1	Top 500 Drawer Front Top 500 Drawer Front Top 500 Drawer Front	America Oak Dark Walnut White Gloss	EV626 SO EV626 SX EV626 WG	1 1 1
2 2 2	Bottom 500 Drawer Front Bottom 500 Drawer Front Bottom 500 Drawer Front	America Oak Dark Walnut White Gloss	EV627 SO EV627 SX EV627 WG	1 1 1
3	Top 500 Drawer Box		EV62867	1
4	Bottom 500 Drawer Box		EV62967	1
5	420 Deep Left Drawer Runner & Bracket		EV60267	1
6	420 Deep Right Drawer Runner & Bracket		EV60367	1
7	Concealed Cabinet Hanger		EV60167	Pair
8	Suspension Plates		EV61067	Pair
9	Base Unit Handle	Chrome	E6748AA	1

CONCEPT CONNECT