E6444 E6828 Concept Connect 450mm Cube Basin Unit - Wall Hung

E6444 SO - America Oak E6828 SO - America Oak
E6444 SX - Dark Walnut E6828 SX - Dark Walnut
E6444 WG - White Gloss E6828 WG - White Gloss

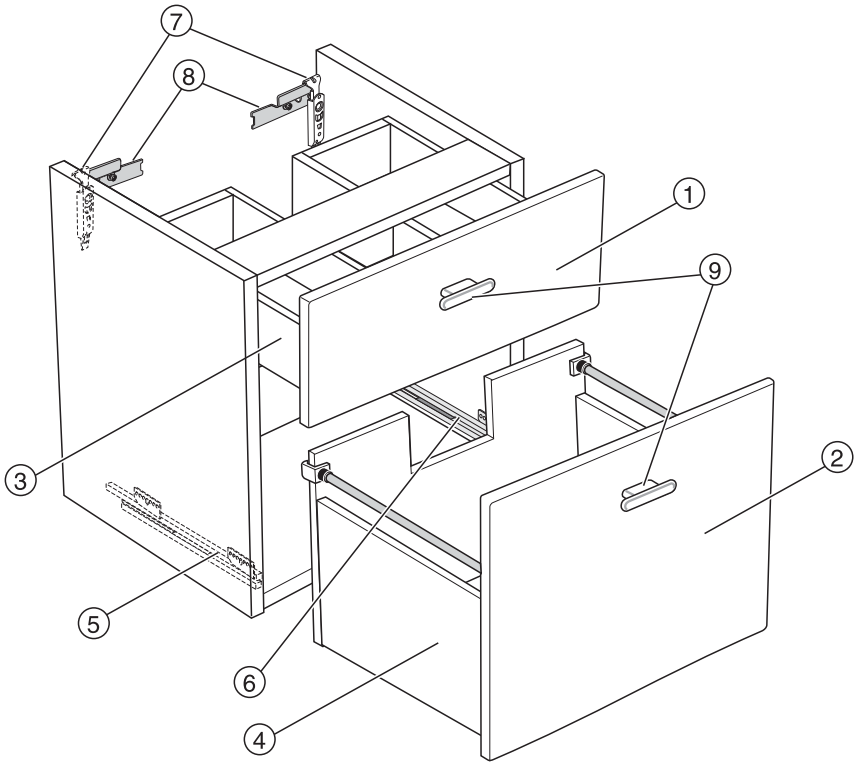

Item	Description	Colour/Finish	Code No.	Quantity
1 1 1	Top 450 Drawer Front Top 450 Drawer Front Top 450 Drawer Front	America Oak Dark Walnut White Gloss	EV622 SO EV622 SX EV622 WG	1 1 1
2 2 2	Bottom 450 Drawer Front Bottom 450 Drawer Front Bottom 450 Drawer Front	America Oak Dark Walnut White Gloss	EV623 SO EV623 SX EV623 WG	1 1 1
3	Top 450 Drawer Box		EV62467	1
4	Bottom 450 Drawer Box		EV62567	1
5	420 Deep Left Drawer Runner & Bracket		EV60267	1
6	420 Deep Right Drawer Runner & Bracket		EV60367	1
7	Concealed Cabinet Hanger		EV60167	Pair
8	Suspension Plates		EV61067	Pair
9	Base Unit Handle	Chrome	E6748AA	1

CONCEPT CONNECT