# E6461 Concept 600 x 210mm WC Unit

## E6461 SO - America Oak
## E6461 SX - Dark Walnut
## E6461 WG - White Gloss

for cistern spare parts please search EEM13800067 CONC 2 CIST 6L LL BI FURN STD

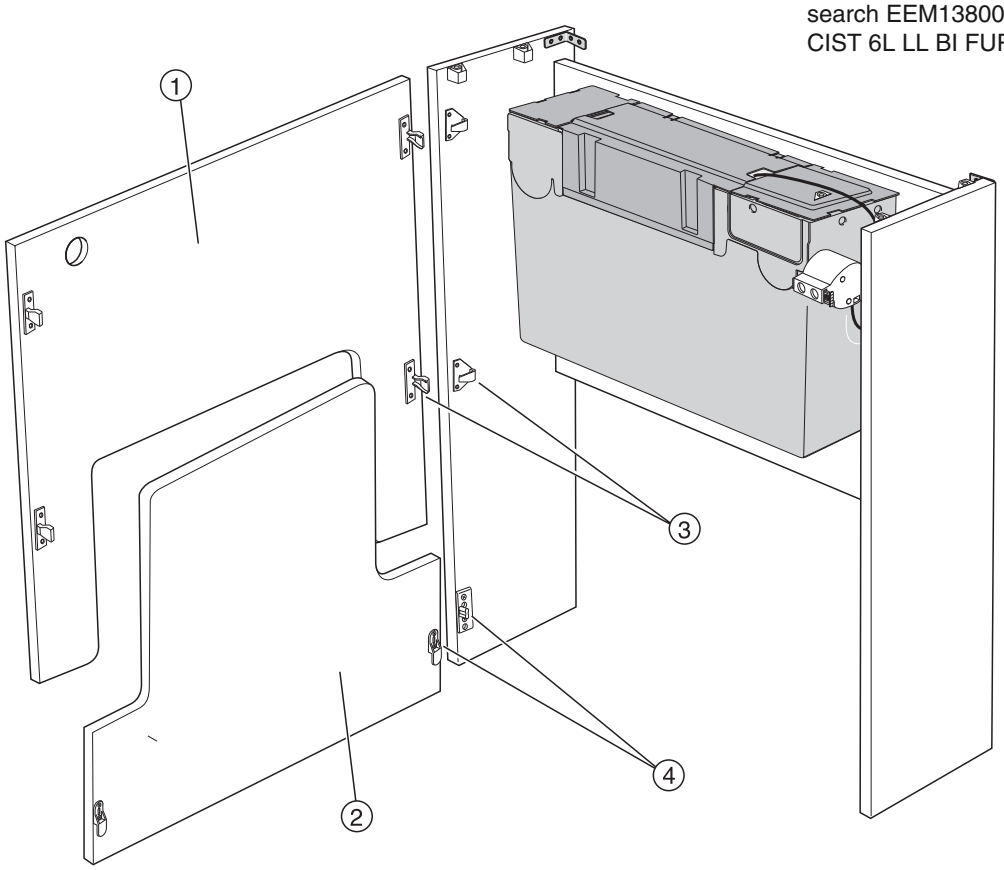


| Item | Description | Colour/Finish | Code No. | Quantity |
|---|---|---|---|---|
| 1 | Top Panel | America Oak | EV652 SO | 1 |
| 1 | Top Panel | Dark Walnut | EV652 SX | 1 |
| 1 | Top Panel | White Gloss | EV652 WG | 1 |
| 2 | Bottom Panel | America Oak | EV653 SO | 1 |
| 2 | Bottom Panel | Dark Walnut | EV653 SX | 1 |
| 2 | Bottom Panel | White Gloss | EV653 WG | 1 |
| 3 | Push Fit Keku Clip 6 x15mm Pozi Csk Head Screw X8 | | EV60767 | Pair |
| 4 | Drop In Keku Clip 6 x15mm Pozi Csk Head Screw X8 | | EV60667 | Pair |

CONCEPT CONNECT