E6455 Concept 600 x 300mm WC Unit

E6455 SO - America Oak
E6455 SX - Dark Walnut
E6455 WG - White Gloss

for cistern spare parts please search EEM13800067 CONC 2 CIST 6L LL BI FURN STD

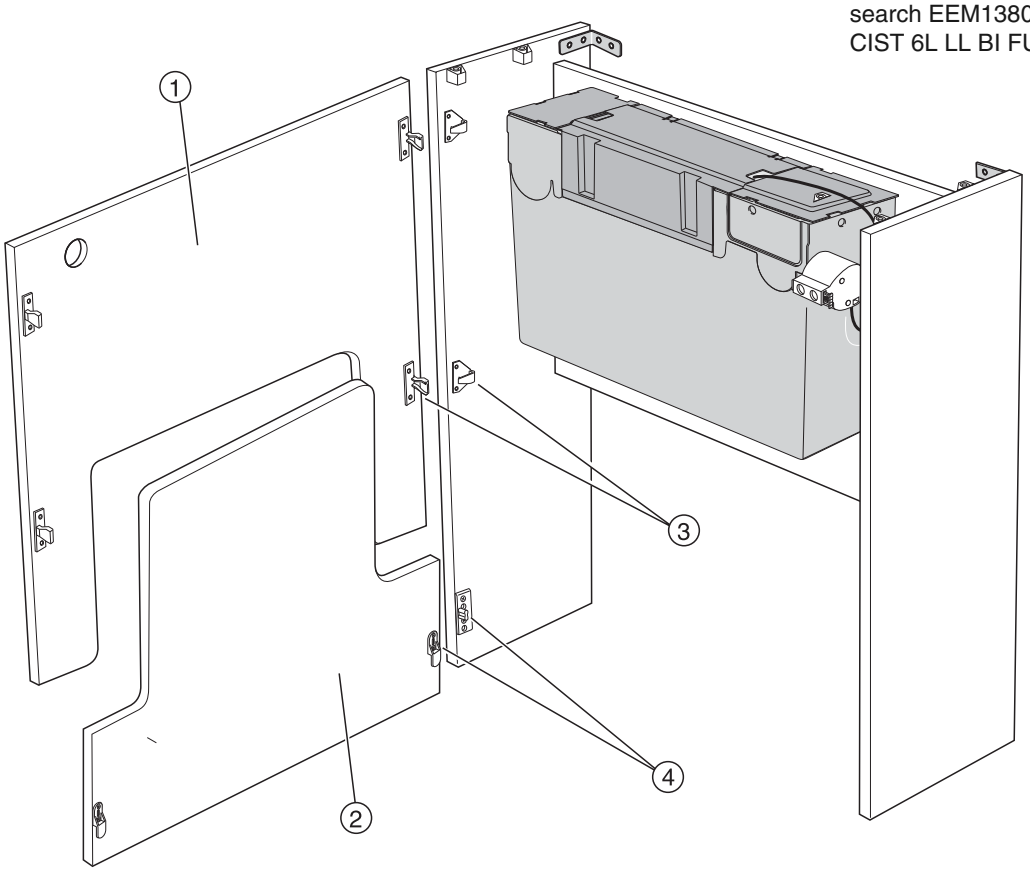

Item	Description	Colour/Finish	Code No.	Quantity
1	Top Panel	America Oak	EV652 SO	1
1	Top Panel	Dark Walnut	EV652 SX	1
1	Top Panel	White Gloss	EV652 WG	1
2	Bottom Panel	America Oak	EV653 SO	1
2	Bottom Panel	Dark Walnut	EV653 SX	1
2	Bottom Panel	White Gloss	EV653 WG	1
3	Push Fit Keku Clip 6 x15mm Pozi Csk Head Screw X8		EV60767	Pair
4	Drop In Keku Clip 6 x15mm Pozi Csk Head Screw X8		EV60667	Pair

CONCEPT CONNECT