E6453 Concept 500 x 300mm WC Unit

E6453 SO - America Oak
E6453 SX - Dark Walnut
E6453 WG - White Gloss

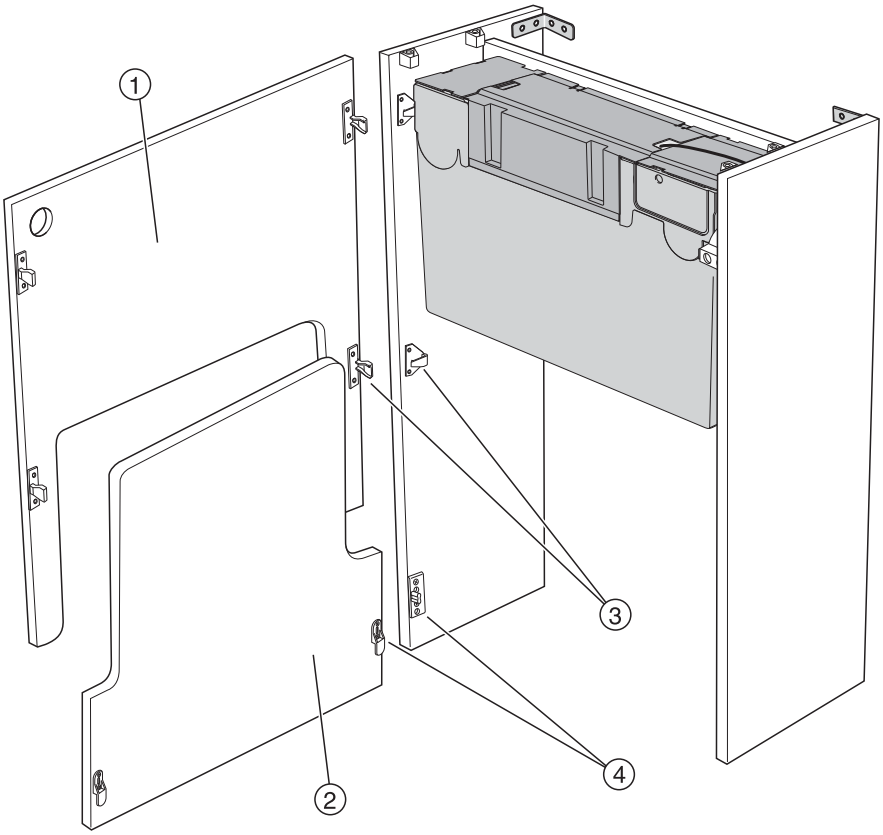

for cistern spare parts
please search
EEM13800167 CONC 2 CIST
6L LL BI FURN NARROW

CONCEPT CONNECT

Item	Description	Colour/Finish	Code No.	Quantity
1	Top Panel	America Oak	EV647 SO	1
1	Top Panel	Dark Walnut	EV647 SX	1
1	Top Panel	White Gloss	EV647 WG	1
2	Bottom Panel	America Oak	EV648 SO	1
2	Bottom Panel	Dark Walnut	EV648 SX	1
2	Bottom Panel	White Gloss	EV648 WG	1
3	Push Fit Keku Clip 6 x15mm Pozi Csk Head Screw X8		EV60767	Pair
4	Drop In Keku Clip 6 x15mm Pozi Csk Head Screw X8		EV60667	Pair